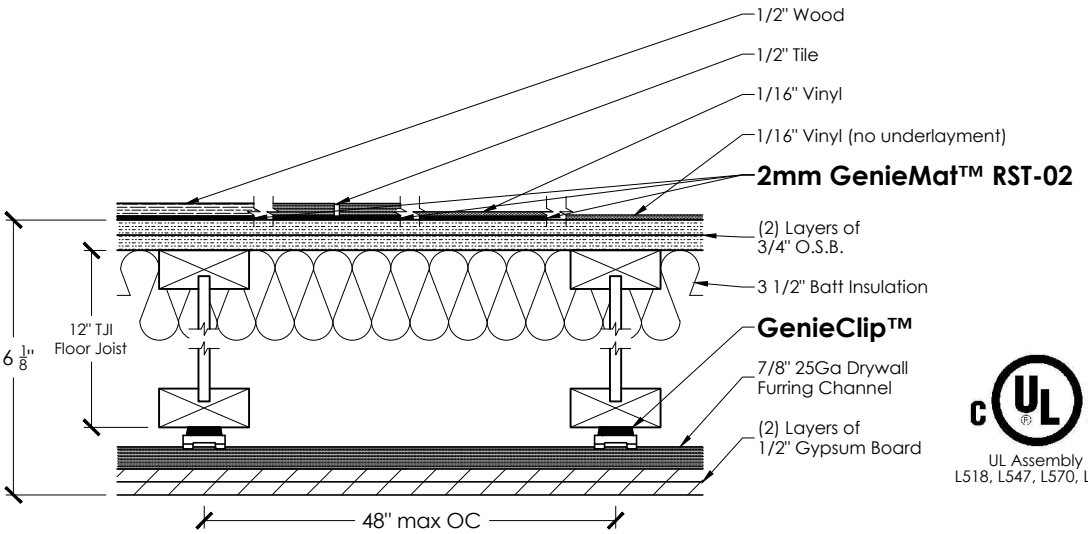

UL Assembly
L518, L547, L570, L589

54
STC
3191934-2a

51-57
IIC
3191934-1b, 1c, 1d, 1e