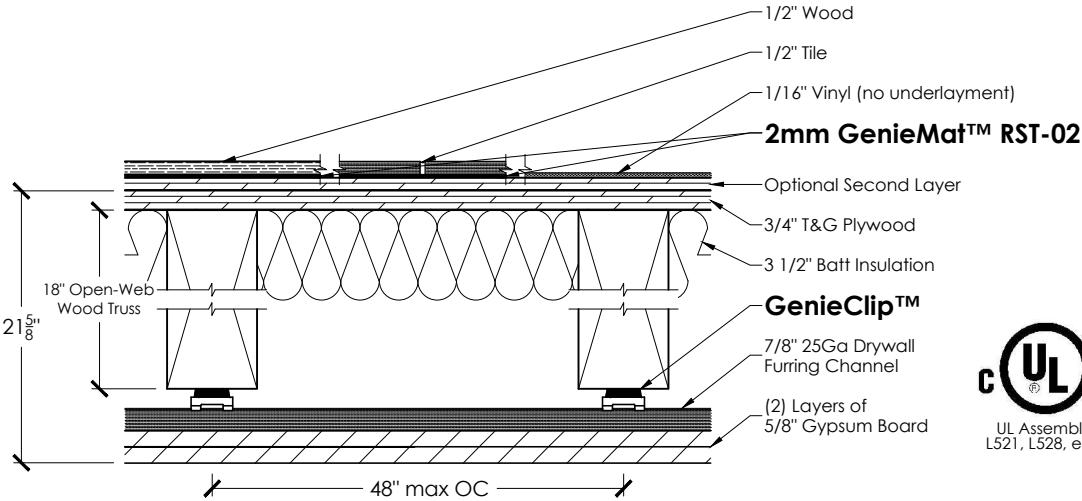

UL Assembly
L521, L528, etc.

53
STC

3171627a, c, u

50-57
IIC

3171627b, d, v